- Installation and wiring of luminaire must be in accordance with all applicabie local codes.
- Installation,inspection,and maintenance of luminaires should be performed by a qualified electrician.
- DO NOT make or alter any open holes in the luminaire Do not modify the luminaire.
- DO NOT install damaged product.
- Make sure electrical power is OFF before and during installation and maintenance.
- Make sure the equipment is properly grounded.
- Make sure the supply voltage is same as the rated fixture voltage.

Slip Fitter Mount

1 Wire the AC cable correctly and fix the luminaire to the pole by screws.

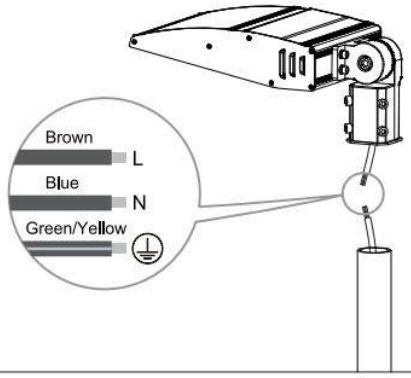

2 Adjust the slip fitter to the desired angle, then tighten the screws on the slip fitter.

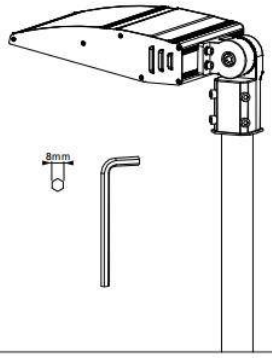

Bracket Mount

1 Fix the luminaire to mounting surface by bolts and nuts.

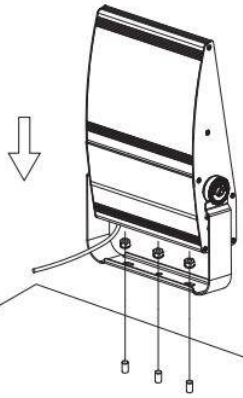

2 Loosen the screws on both side of the bracket and adjust the luminaire to the desired angle, then tighten the screws.

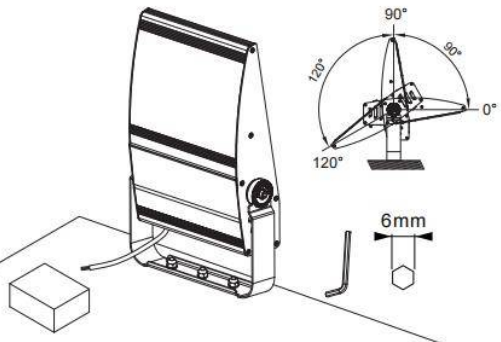

3 Wire the AC cable correctly.

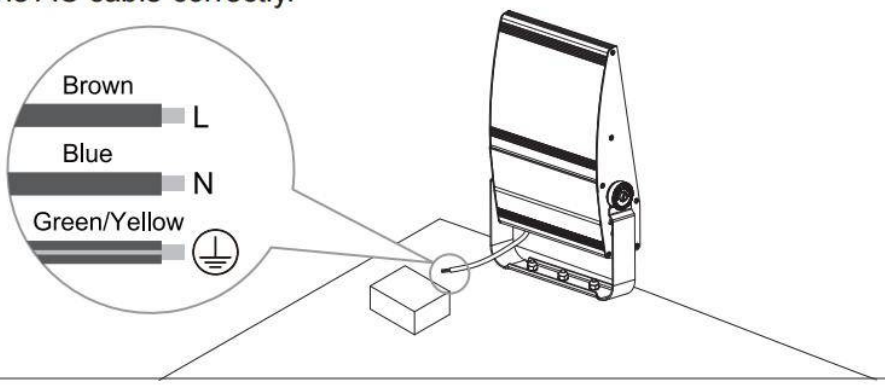
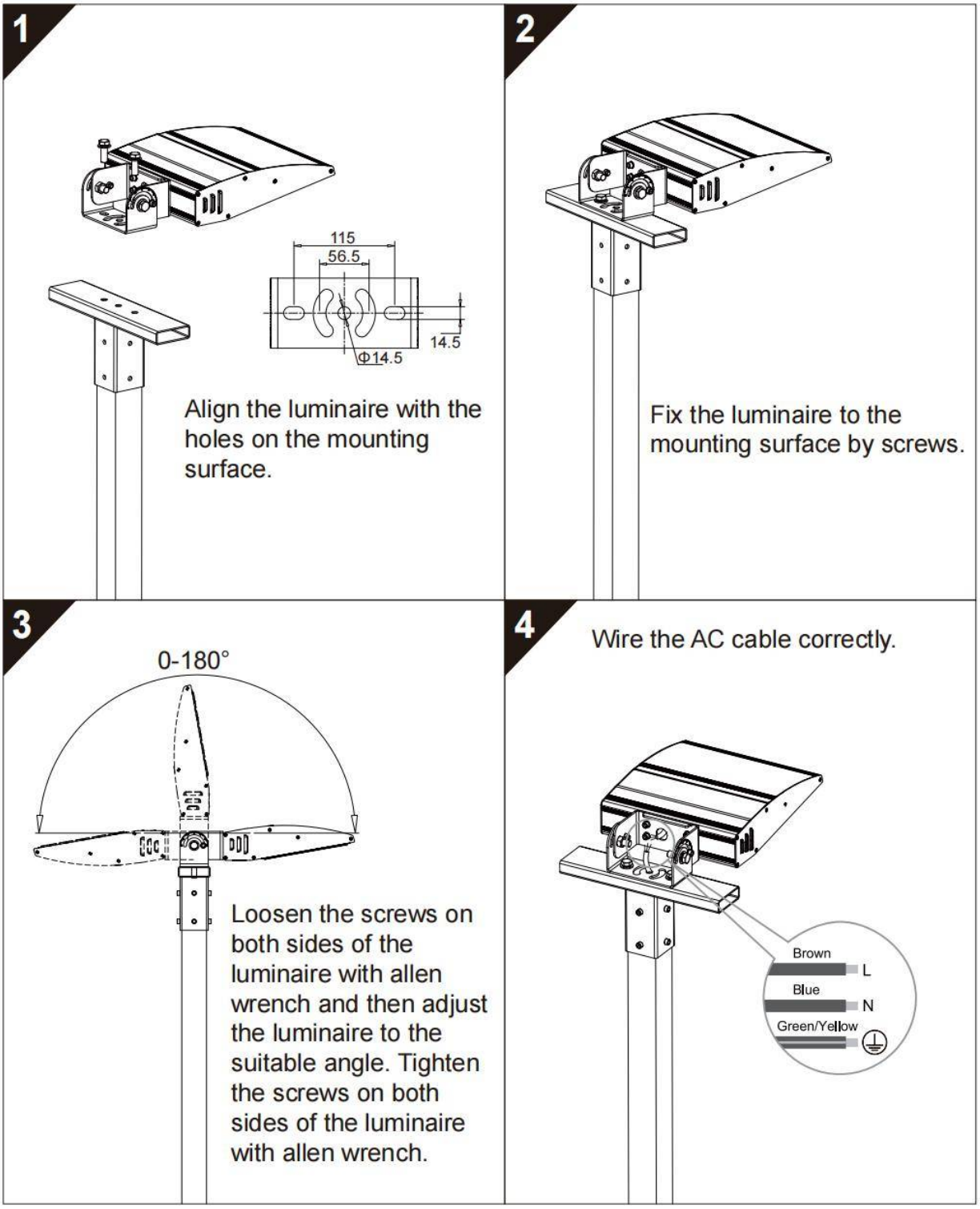
Trunnion Mount